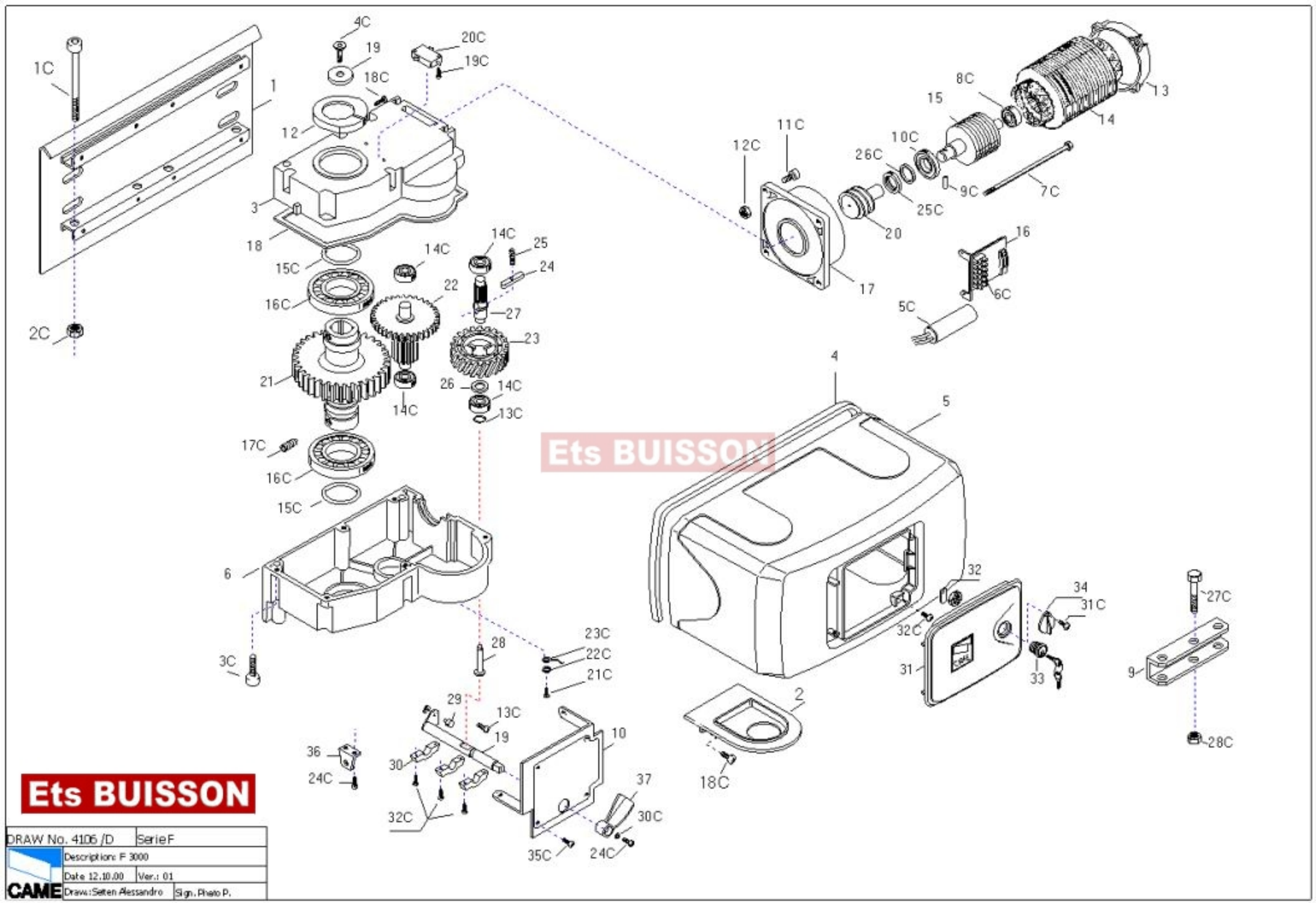

Ets BUISSON

DRAW No. 4106 /D	Serie F	
CAME	Description: F 3000	
	Date 12.10.00	Ver.: 01
	Draw.: Setten Alessandro	Sign. Photo P.